OPTION 3

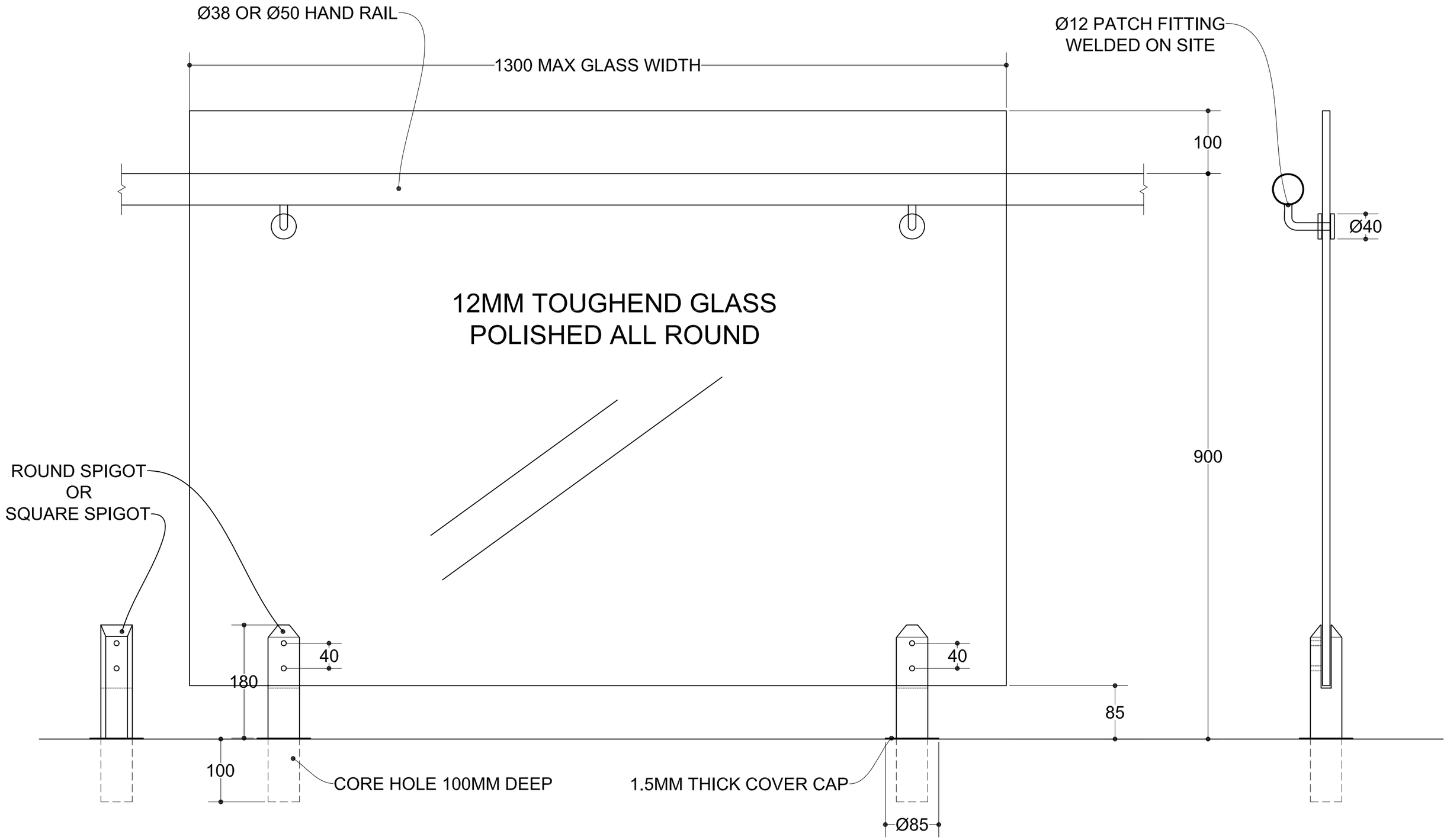
Ø38 OR Ø50 HAND RAIL
1300 MAX GLASS WIDTH
Ø12 PATCH FITTING
WELDED ON SITE
100
Ø40
12MM TOUGHEND GLASS
POLISHED ALL ROUND
900
ROUND SPIGOT
OR
SQUARE SPIGOT
40
180
40
85
100
CORE HOLE 100MM DEEP
1.5MM THICK COVER CAP
Ø85